FRAME TECHNICAL DATA

May, 2010

CURRIES®
ASSA ABLOY

ASSA ABLOY, the global leader in door opening solutions
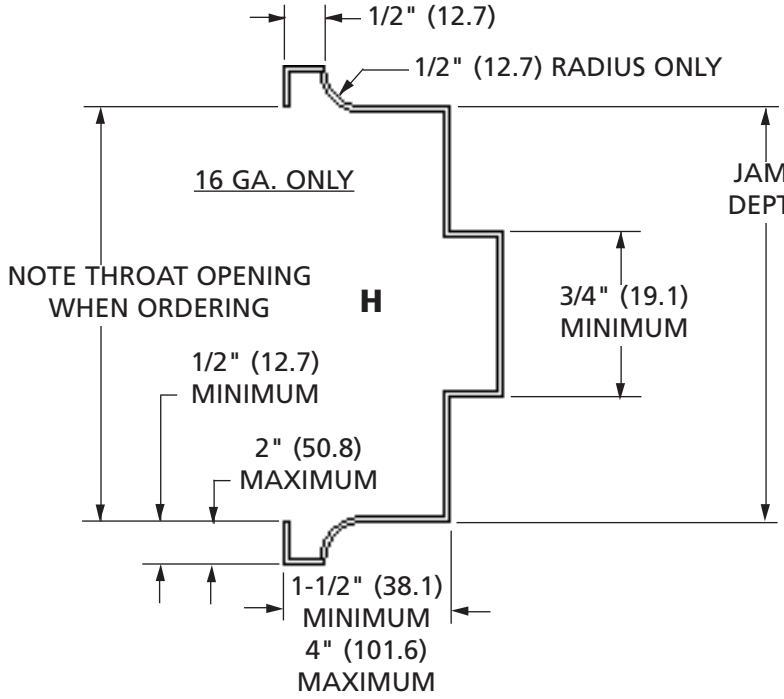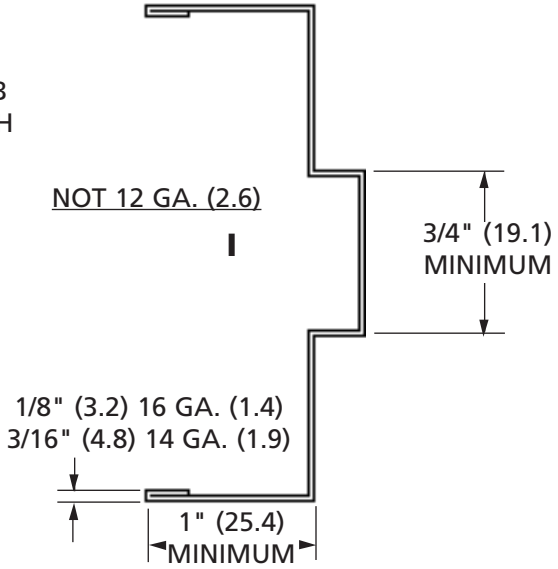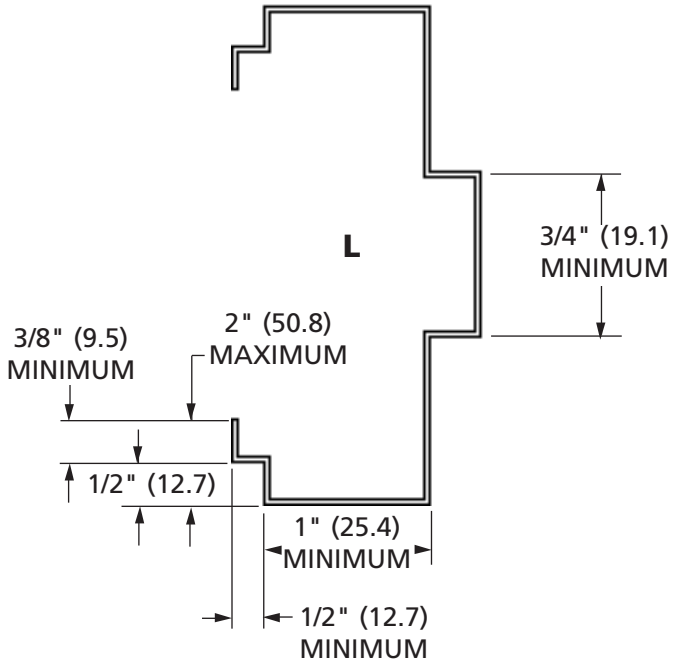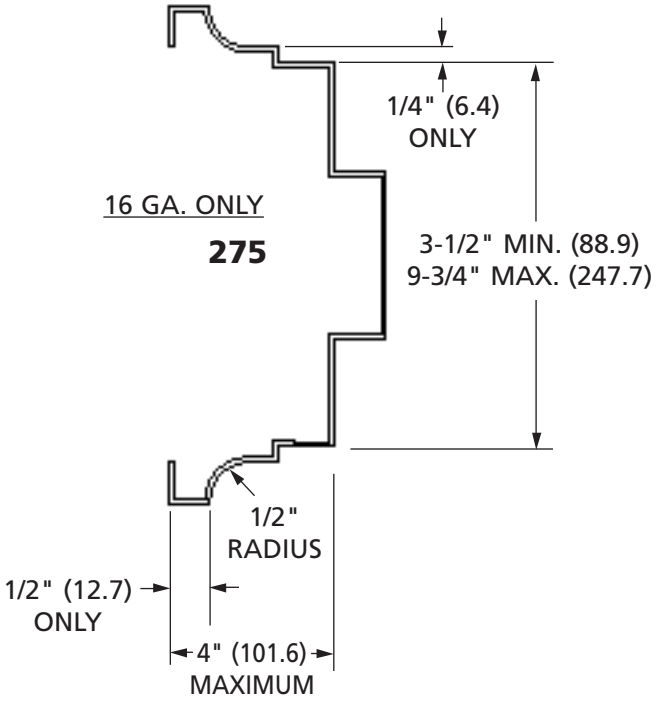
L